© Design Copyright Reserved. This drawing and design is the property of Neil Dowlman Architecture Ltd. Written consent must be obtained from Neil Dowlman Architecture Ltd before copying or reproducing this drawing. Do not scale this drawing, use figured dimensions only. Contractors are responsible for taking and checking site and building dimensions before proceeding. Any discrepancy must be reported to Neil Dowlman Architecture Ltd immediately.

REVISION:	DESCRIPTION:	MADE BY:	DATE:
A	Revisions following Heritage Consultant comments	NH	29-1-21

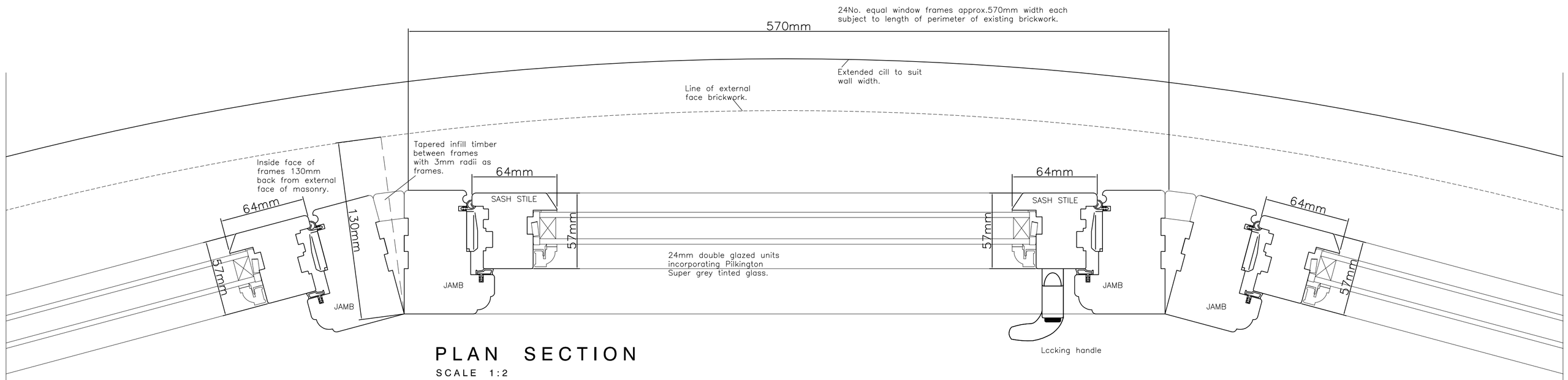

PLAN SECTION
SCALE 1:2

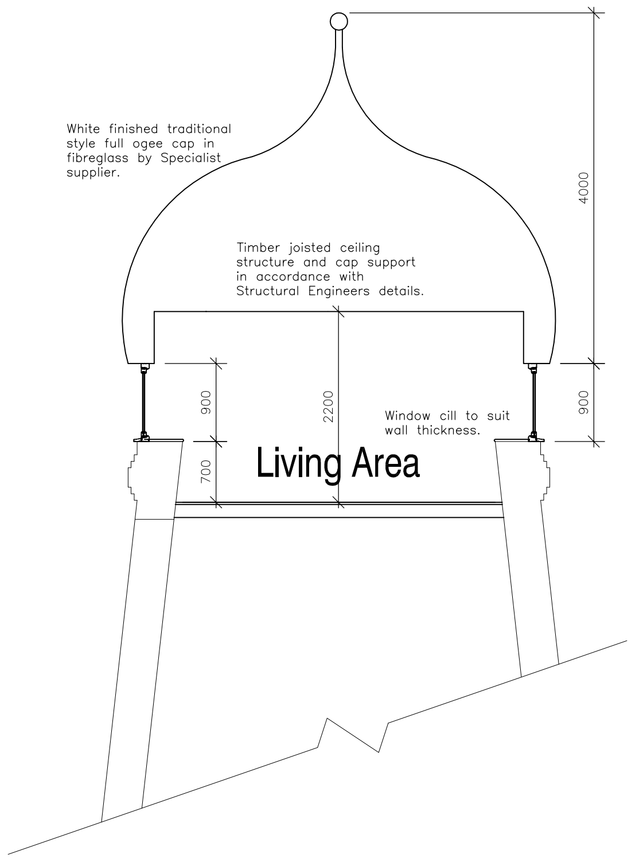

SECTION
SCALE 1:50

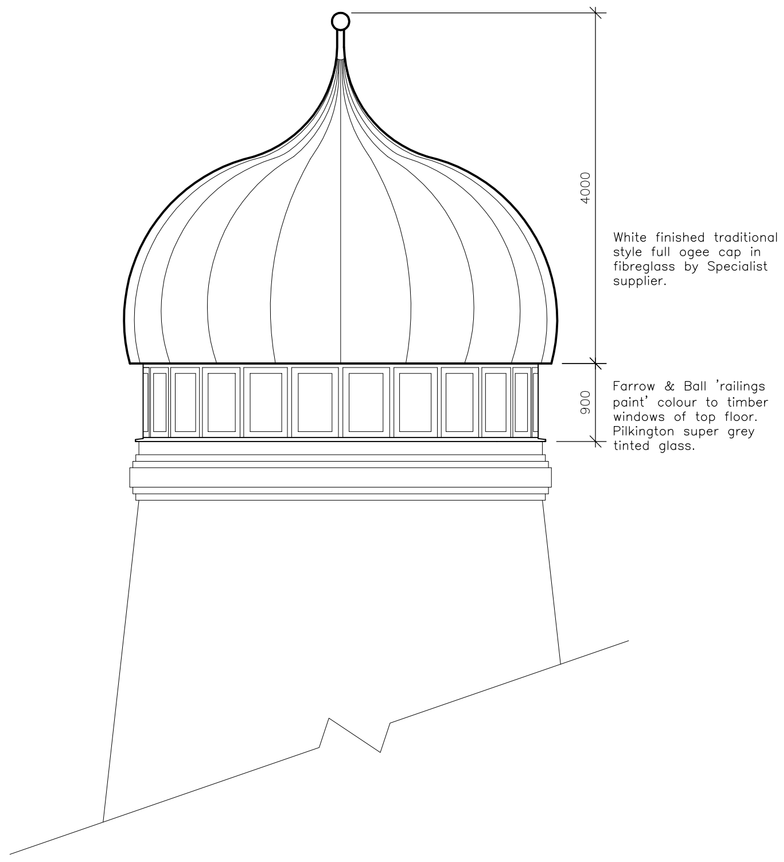

ELEVATION
SCALE 1:50

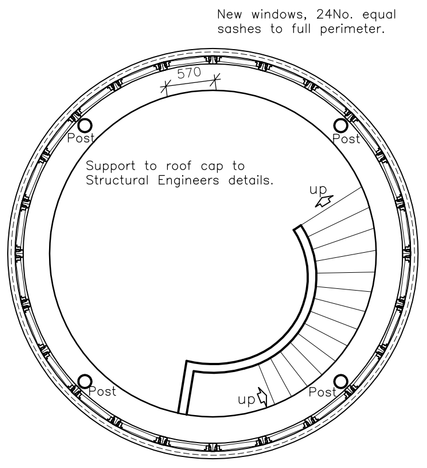

FOURTH FLOOR PLAN
SCALE 1:50

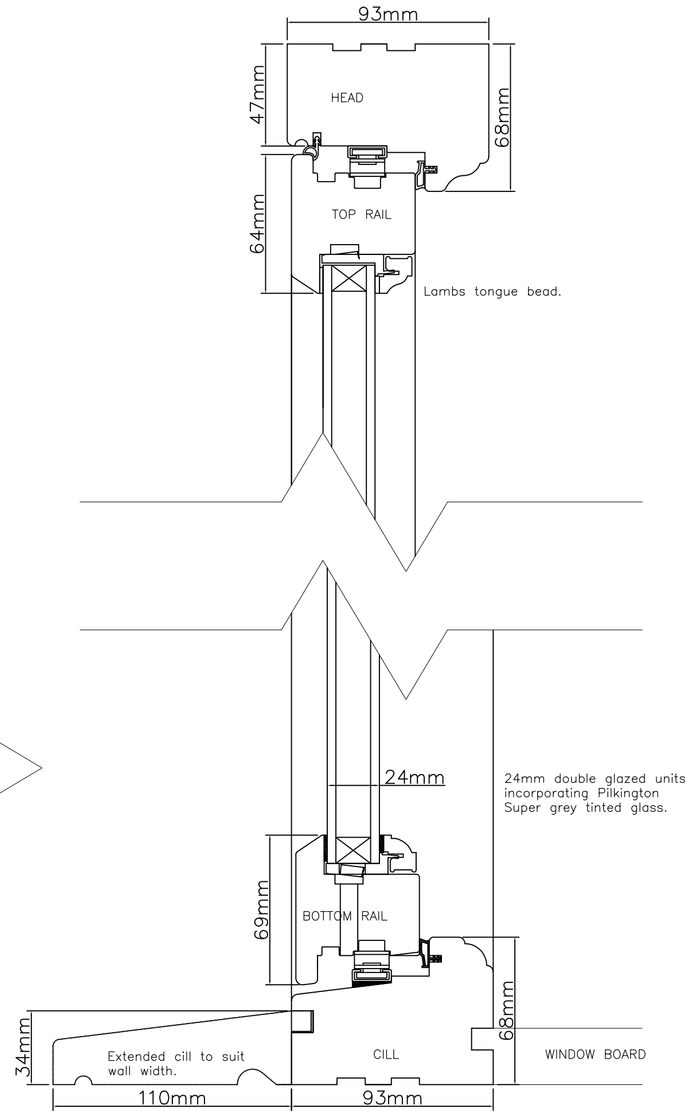

VERTICAL SECTION
SCALE 1:2

1:50 0 0.5 1 1.5 2.5 m

1:2 0 20 50 100 mm

CLIENT:	Mrs K Simonds
PROJECT:	Proposed Conversion of Disused Mill Mill Lane Sutterton PE20 2EN
TITLE:	Top Floor Window Details
SCALE:	1:50
REVISION LETTER:	A
DRAWN:	NH
DRAWING NO:	B3422 - 4004
ORIGINAL SIZE:	A1
CHECKED:	
DATE:	September 2020

Architectural Consultants

BOSTON 12-14 Main Ridge West, Boston PE21 6QQ t: (01205) 357 272 e: boston@neildowlman-architecture.co.uk
STAMFORD 14 Barn Hill, Stamford PE9 2AE t: (01780) 758 522 e: stamford@neildowlman-architecture.co.uk
ALFORD* 4-5 Church Street, Alford LN13 9EF t: (01507) 463 863 e: alford@neildowlman-architecture.co.uk
HORNCASTLE* 28 St Lawrence Street, Horncastle LN9 5DN t: (01507) 522 899 e: horncastle@neildowlman-architecture.co.uk
LOUTH* 62 Northgate, Louth LN11 0LY t: (01507) 601 155 e: louth@neildowlman-architecture.co.uk
SKEGNESS (Satellite Office) t: (01754) 880 080 e: skegness@neildowlman-architecture.co.uk
*By appointment only

www.neildowlman-architecture.co.uk

DOWLMAN
Neil Dowlman Architecture

Planning | Design | Project Management